

# SolarHub Series

VH800D / VH2000D / VH2500D / VH3000D + VB5000D

**Start with Solar, Add Storage Anytime**

FROM
**800–3,000 W**
Balcony to rooftop[1]

UP TO
**3,000 W**
Solar input, 4 MPPTs[2]

**Hybrid**
One unit for solar, battery and grid

**≤ 10 ms**
Backup switchover[3]

**5–30 kWh**
Optional battery storage[4]

**AI**
Smart energy management

## Built for Outdoor Installation

**IP66**
Inverter and battery packs

**-40 to 65 °C**[5]
Inverter operating range

**Fanless Design**
Natural convection cooling

**6.8 kg Wall-Mounted**
Compact, 327 × 270 × 53 mm

**Integrated Protection**
Insulation, surge and residual current monitoring

**Safe LFP Storage**
Aerosol suppression and self-heating in every pack




**SolarHub VH**
VH800D to VH3000D

**+ VB5000D**
5 kWh stackable battery pack, 1 to 6 per system

1 Rated on-grid output: 800 W (VH800D) to 3,000 W (VH3000D); backup output up to 3,000 W on all models. In some regions, systems up to 800 W may be plugged directly into a socket. Install strictly in line with local regulations; a dedicated protected circuit in the distribution board is recommended.
2 VH2000D, VH2500D and VH3000D. VH800D: up to 2,000 W.
3 Backup requires at least one VB5000D battery pack.
4 1 to 6 × VB5000D packs of 5 kWh each. Without a battery, SolarHub works as a PV microinverter.
5 Battery packs: −20 to 50 °C.

Values were measured in the VaySunic laboratory under specific test conditions and may vary in actual use. Images are for reference only.

© 2026 VaySunic. All rights reserved. Specifications are subject to change without notice. 

## Typical Applications



01 · BALCONY

### Balcony and Plug-in Solar[2]

TYPICAL CONFIGURATION[1]

**VH800D + 1 × VB5000D**

**5 kWh**

| 800 W | 2,000 W | 3,000 W |
|---|---|---|
| AC output | Solar input | Backup / off-grid[3] |



02 · ROOFTOP

### Rooftop Solar and Storage

TYPICAL CONFIGURATION[1]

**VH3000D + (2–6) × VB5000D**

**10–30 kWh**

| 3,000 W | 3,000 W | 3,000 W |
|---|---|---|
| AC output | Solar input | Backup / off-grid |



03 · WEAK GRID

### Homes with Unstable Grids

TYPICAL CONFIGURATION[1]

**VH2000D + (1–3) × VB5000D**

**5–15 kWh**

| 2,000 W | 3,000 W | 3,000 W |
|---|---|---|
| AC output | Solar input | Backup / off-grid |

## One Ecosystem

With EnergyPilot: set up once online, then coordinated over local Wi-Fi, also without internet

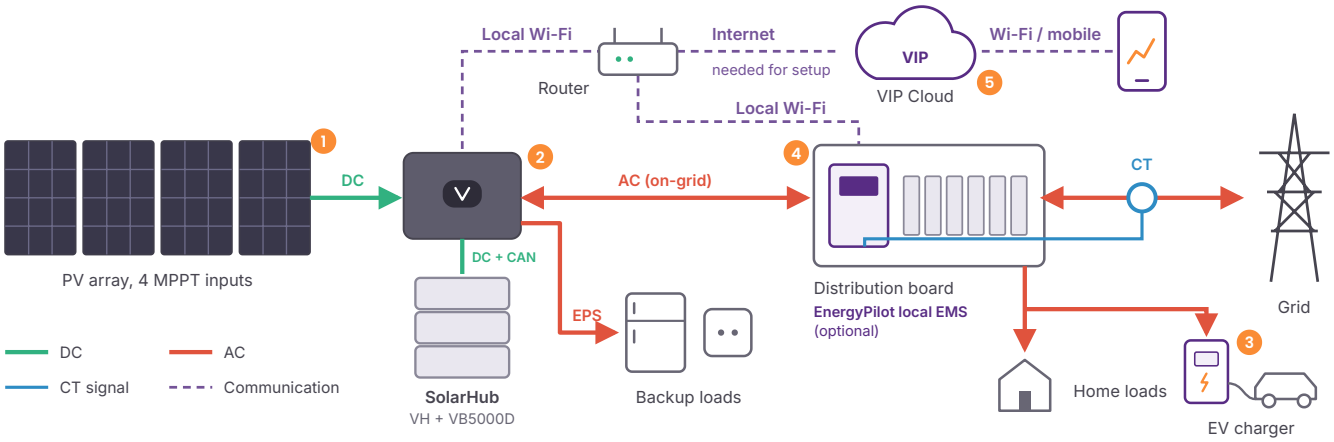


**1 SOLAR**
**PV + SolarCore**
4 MPPT inputs, expandable with microinverters

**2 STORAGE**
**SolarHub**
Hybrid microinverter with stackable batteries

**3 CHARGING**
**ChargeFlow**
EV charger with solar-priority charging

**4 LOCAL EMS**
**EnergyPilot**
Local dispatch and zero export over local Wi-Fi

**5 CLOUD**
**VIP Cloud**
App, monitoring and AI scheduling

1 Typical configurations are for guidance only. Size each system to the site and local regulations.
2 Plug-in connection only where local regulations allow; a dedicated protected circuit is recommended.
3 Up to 3,000 W with PV and battery together, or with two or more VB5000D packs installed. Battery alone with one pack: 2,500 W.

© 2026 VaySunic. All rights reserved. Specifications are subject to change without notice. 

# Modular Storage SolarHub Series

Install SolarHub as a PV microinverter today and add VB5000D packs whenever you need storage: up to six packs per system, and new and existing packs can be mixed. Secure every stack with the anti-tip accessory.

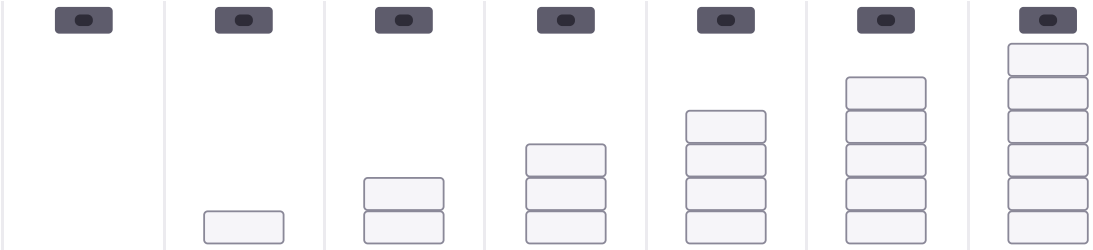

| Configuration | VH | VH + 1 | VH + 2 | VH + 3 | VH + 4 | VH + 5 | VH + 6 [4] |
|---|---|---|---|---|---|---|---|
| **System Capacity** | Solar only | **5 kWh** | **10 kWh** | **15 kWh** | **20 kWh** | **25 kWh** | **30 kWh** |
| Battery-only AC Output [1] | – | 2,500 W | 3,000 W | 3,000 W | 3,000 W | 3,000 W | 3,000 W |
| Stack Height [2] | – | 323 mm | 646 mm | 969 mm | 1,292 mm | 1,615 mm | 1,938 mm |
| Stack Weight [2] | – | 41 kg | 82 kg | 123 kg | 164 kg | 205 kg | 246 kg |

## Battery Pack Safety

Built into every VB5000D

### Aerosol Fire Suppression

Integrated, activates automatically.

### Self-Heating

Automatic cell heating when cold.

### 12,000 Cycles [3]

Long-life LFP cells.

## Dimensions

### SolarHub VH

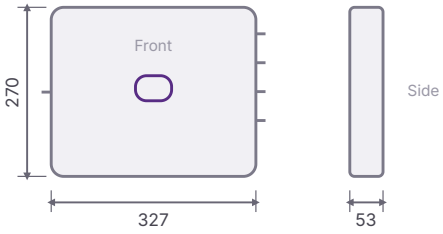


### VB5000D

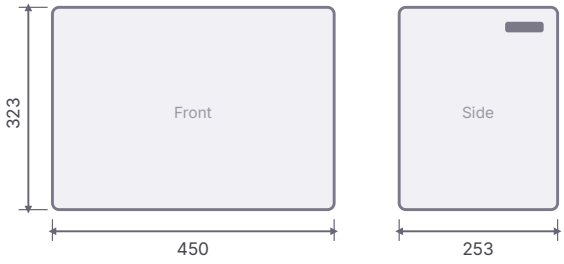


Dimensions in mm

## Smart Energy Management

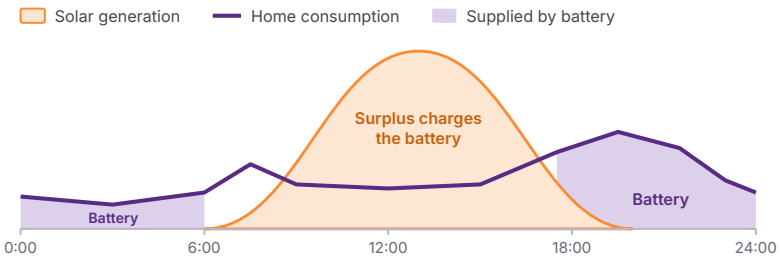


Typical day in self-consumption mode (illustrative)

### Self-Consumption

Solar first, surplus stored for the evening

### Time-of-Use

Charges cheap, supplies at peak prices

### Backup

Adjustable SOC reserve for outages

### Zero Export

Grid feed-in limited via EnergyPilot

### Solar Forecast

Plans charging around the expected solar yield.

### AI Scheduling

Learns your usage and optimises charging.

### App Monitoring

Live energy flows and settings on your phone.

1 AC output from the battery alone. Total on-grid output is limited by the VH model rating (800 / 2,000 / 2,500 / 3,000 W).
2 Battery packs only, calculated from pack dimensions and weights, excluding base and mounting brackets. SolarHub is wall-mounted separately.
3 Measured under laboratory test conditions. Actual cycle life depends on operating conditions.
4 The VH + 6 × VB5000D configuration requires additional anti-tip reinforcement.

© 2026 VaySunic. All rights reserved. Specifications are subject to change without notice. 

# Technical Specifications SolarHub Series

| Model | VH800D | VH2000D | VH2500D | VH3000D |
|---|---|---|---|---|
| **PV Input (DC)** | | | | |
| Compatible PV Module Power (Wp)[1] | 200–550+ | 400–750+ | 500–750+ | 610–750+ |
| Max. PV Input Power (W)[2] | 2,000 (4 × 500) | 3,000 (4 × 750) | | |
| MPPTs / Voltage Range / Max. Input (V) | 4 / 18–60 / 60 | | | |
| Max. Input / Short-Circuit Current (A) | 20 / 25 per MPPT | | | |
| **AC Input (Grid Charging)** | | | | |
| Nominal Voltage (Range) / Frequency[5] | 230, 240 V (180–275 V) / 50 Hz | | | |
| Max. Input Current / Max. Charging Power[4] | 13.8 A / 3,000 W | | | |
| **AC Output (On-Grid)** | | | | |
| Rated Output Power (W)[3] | 800 | 2,000 | 2,500 | 3,000 |
| Rated / Max. Output Current (A) | 3.5 / 3.5 | 8.7 / 16 | 10.9 / 16 | 13.0 / 16 |
| Nominal Voltage (Range) / Frequency[5] | 230, 240 V (180–275 V) / 50 Hz | | | |
| Power Factor | > 0.99 (default), adjustable 0.8 leading to 0.8 lagging | | | |
| Total Harmonic Distortion | < 3% | | | |
| Overvoltage Category | III (AC port) | | | |
| **AC Output (Backup / EPS)** | | | | |
| Max. Continuous Power[6] | 3,000 W | | | |
| Rated Output Current (A) | 13 | | | |
| Nominal Voltage (Range) / Frequency (Range) | 230 V (218.5–241.5 V) / 50 Hz (49.5–50.5 Hz) | | | |
| Switchover Time (Grid to Backup) | ≤ 10 ms | | | |
| Backup Connection | Dedicated EPS output | | | |
| **Battery (VB5000D)** | | | | |
| Compatible Battery / Number of Packs | VB5000D only / 1–6 per system | | | |
| Cell Type | $LiFePO_4$ (LFP) | | | |
| Nominal Capacity per Pack / System (kWh) | 5.0 (5,017.6 Wh) / 5–30 | | | |
| Cycle Life[7] | 12,000 cycles | | | |
| Self-Heating / Pack Mixing | Integrated, automatic / Supported | | | |
| Dimensions (W × D × H) / Weight | 450 × 253 × 323 mm / 41 ± 0.5 kg | | | |
| Charging / Discharging Temperature[8] | −20 to 55 °C / −20 to 55 °C | | | |
| Operating Ambient / Storage Temperature | −20 to 50 °C / −25 to 60 °C | | | |
| Communication (to VH) | CAN | | | |
| **Protection and Safety** | | | | |
| Aerosol Fire Suppression | Integrated in every VB5000D, automatic activation | | | |
| Integrated Protection | Insulation monitoring, DC surge protection, residual current monitoring | | | |
| Grid and AC Protection | Anti-islanding, AC short-circuit, AC over-current, AC over-voltage | | | |
| Battery Protection (BMS) | Temperature monitoring, over-voltage, over-current | | | |
| **General Data (SolarHub VH)** | | | | |
| Dimensions (W × H × D) / Weight | 327 × 270 × 53 mm / 6.8 kg | | | |
| Ingress Protection | IP66 (inverter and battery packs) | | | |
| Operating Ambient Temperature | −40 to 65 °C | | | |
| Relative Humidity / Max. Altitude | 5–100%, non-condensing (VB5000D: 5–90%) / 2,000 m | | | |
| Cooling / Mounting | Natural convection, fanless / Wall-mounted | | | |
| Communication / Monitoring | Wi-Fi (2.4 GHz), CAN (battery) / LED indicators, VIP Cloud | | | |
| Smart Energy Management | AI scheduling, dynamic tariff support, solar forecast (VIP Cloud) | | | |
| Zero Feed-in Control | Via EnergyPilot local EMS controller (optional) | | | |

## Standards Compliance

| | |
|---|---|
| **Grid** | EN 50549-1:2019 · EN 50549-10:2022 · VDE-AR-N 4105 (DE) · CEI 0-21 (IT) · C10/11 (BE) · G98 (UK) · PEA / MEA (TH) |
| **Safety** | IEC/EN 62109-1 · IEC/EN 62109-2 · EN 50665:2017 · EN IEC 62311:2020 |
| **Radio and EMC** | RED 2014/53/EU · EN 300 328 · EN 301 489-1 / -17 · IEC/EN 61000 series · IEC/EN 62920 |
| **Cybersecurity** | EN 18031-1 · PSTI (UK) |
| **Battery** | IEC/EN 62619 · IEC/EN 62477-1 · UN 38.3 |

1 Recommended module power per MPPT input. Check module Voc at the lowest site temperature against the 60 V input limit.
2 PV power feeds both AC output and battery charging. This oversizing does not affect the warranty.
3 Without a battery, on-grid output follows the available PV power. Rated power is reached with PV and battery supplying together.
4 Requires at least one VB5000D. Charging from the PV and AC ports can be combined up to the maximum charging power.
5 Nominal voltage, frequency and ranges are set to the local grid code. Grid feed-in power may be limited by local regulations.
6 Requires at least one VB5000D; with PV and battery together on all models. Battery alone: 2,500 W with one pack, 3,000 W with two or more.
7 Measured under laboratory test conditions. Actual cycle life depends on temperature, charge and discharge rate, and depth of discharge.
8 With built-in self-heating. When the cell temperature is low, the battery automatically heats the cells into the operating range, for both charging and discharging. Temperatures refer to cell temperature.

© 2026 VaySunic. All rights reserved. Specifications are subject to change without notice. 