

PowerCube Series GEN 2

VA800D / VA1200D / VA2000D / VA2500D / VA3000D / VA3600D + VB5000D

Expand as Your Energy Needs Grow

FROM
800–3,600 W
Plug-in to whole-home[1]

UP TO
3,000 W
Solar input, 4 MPPTs[2]

Hybrid
Microinverter with built-in battery

≤ 10 ms
Backup switchover

2.5–32.5 kWh
Modular storage, stackable[3]

AI
Smart energy management

Safety and Durability

Aerosol Fire Suppression
Built into every battery module

Self-Heating
Automatic cell heating in cold weather

12,000 Cycles[4]
Long-life LFP cells

IP66
Dust-tight and water-jet protected

15-Year Design Life
Built for long service

10-Year Warranty[5]
Standard product warranty

VA Series
Inverter unit with 2.5 kWh built in

VB5000D
5 kWh stackable battery pack



1 800 W (VA800D) to 3,600 W (VA3600D). In some regions, systems up to 800 W may be plugged directly into a socket. Install strictly in line with local regulations; a dedicated protected circuit in the distribution board is recommended.
2 VA2000D, VA2500D and VA3000D. VA800D: up to 2,000 W.
3 2.5 kWh built into the VA unit, plus up to 6 × VB5000D packs of 5 kWh each.
4 Measured under laboratory test conditions. Actual cycle life depends on operating conditions.
5 Conditions apply. Refer to the VaySunic Limited Warranty for details.

Values were measured in the VaySunic laboratory under specific test conditions and may vary in actual use. Images are for reference only.

© 2026 VaySunic. All rights reserved. Specifications are subject to change without notice.

Typical Applications



01 · BALCONY

Balcony and Plug-in Solar[2]

TYPICAL CONFIGURATION[1]

VA800D + (0–1) × VB5000D

2.5–7.5 kWh

800 W	2,000 W	3,600 W
AC output	Solar input	Backup / off-grid[3]



02 · GARDEN

Garden, Patio and Carport

TYPICAL CONFIGURATION[1]

VA2000D + (1–2) × VB5000D[4]

7.5–12.5 kWh

2,000 W	3,000 W	3,600 W
AC output	Solar input	Backup / off-grid



03 · ROOFTOP AND RETROFIT

Rooftop and Retrofit[5]

TYPICAL CONFIGURATION[1]

VA3600D + (3–6) × VB5000D

17.5–32.5 kWh

3,600 W	3,000 W	3,600 W
AC output	Solar input	Backup / off-grid

One Ecosystem

With EnergyPilot: set up once online, then coordinated over local Wi-Fi, also without internet

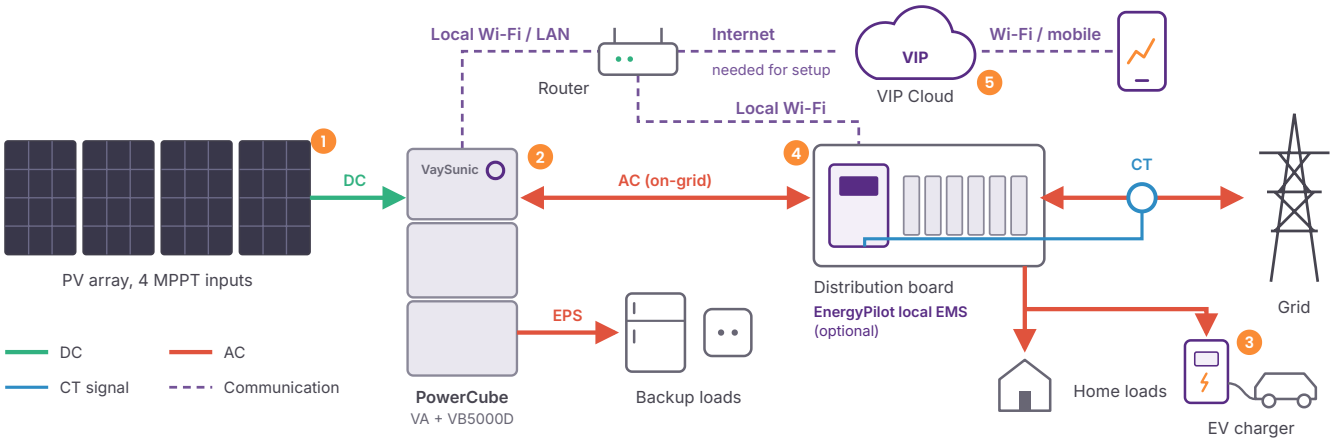

1 SOLAR
PV + SolarCore
4 MPPT inputs, expandable with microinverters

2 STORAGE
PowerCube
Hybrid microinverter with stackable batteries

3 CHARGING
ChargeFlow
EV charger with solar-priority charging

4 LOCAL EMS
EnergyPilot
Local dispatch and zero export over local Wi-Fi

5 CLOUD
VIP Cloud
App, monitoring and AI scheduling

1 Typical configurations are for guidance only. Size each system to the site and local regulations.
2 Plug-in connection only where local regulations allow.
3 Up to 3,600 W with PV and battery together, or with 7.5 kWh or more installed. Battery alone at 2.5 kWh: 1,200 W.
4 Shown with a socket connection, only where local regulations allow; a dedicated protected circuit is recommended.
5 Retrofit: add PowerCube and EnergyPilot to an existing PV system.

© 2026 VaySunic. All rights reserved. Specifications are subject to change without notice.

Modular Storage PowerCube Series

Start with one VA unit and stack up to six VB5000D packs; new and existing packs can be mixed. Secure every stack with the anti-tip accessory. For more capacity, three or more systems can run in parallel.

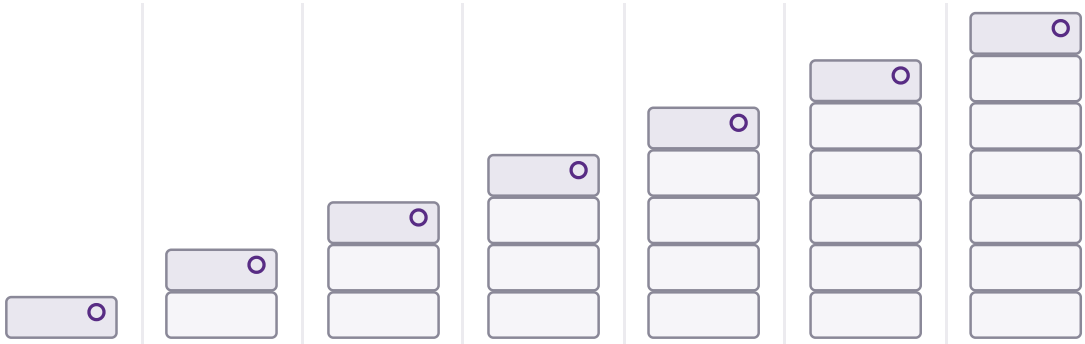

Configuration	VA	VA + 1	VA + 2	VA + 3	VA + 4	VA + 5	VA + 6 [3]
System Capacity	**2.5 kWh**	**7.5 kWh**	**12.5 kWh**	**17.5 kWh**	**22.5 kWh**	**27.5 kWh**	**32.5 kWh**
Battery-only AC Output [1]	1,200 W	3,600 W	3,600 W	3,600 W	3,600 W	3,600 W	3,600 W
Stack Height [2]	290 mm	613 mm	936 mm	1,259 mm	1,582 mm	1,905 mm	2,228 mm
Stack Weight [2]	26 kg	67 kg	108 kg	149 kg	190 kg	231 kg	272 kg

Dimensions

VA Series



VB5000D

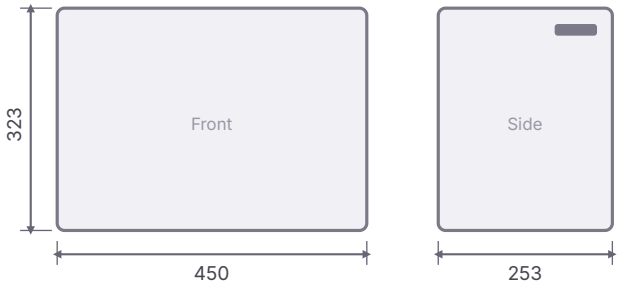

Dimensions in mm

Smart Energy Management

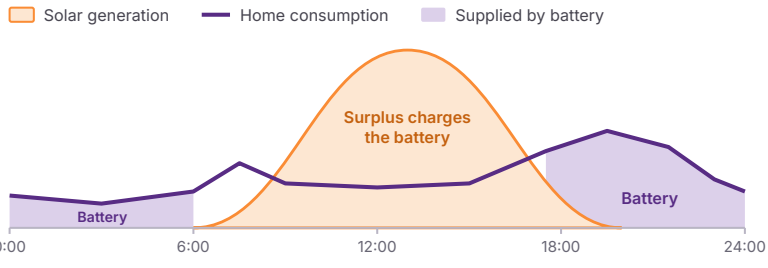

Typical day in self-consumption mode (illustrative)

Self-Consumption
Solar first, surplus stored for the evening

Time-of-Use
Charges cheap, supplies at peak prices

Backup
Adjustable SOC reserve for outages

Zero Export
Grid feed-in limited via EnergyPilot

Solar Forecast
Plans charging around the expected solar yield.

AI Scheduling
Learns your usage and optimises charging automatically.

App Monitoring
Live energy flows and settings on your phone.

1 AC output from the battery alone; PV makes up the rest. Grid output is capped by the VA model rating (800 / 1,200 / 2,000 / 2,500 / 3,000 / 3,600 W); backup output is 3,600 W on all models.
2 Calculated from module dimensions and weights, excluding base and mounting brackets.
3 The VA + 6 × VB5000D configuration requires additional anti-tip reinforcement.

© 2026 VaySunic. All rights reserved. Specifications are subject to change without notice.

Technical Specifications PowerCube Series

Model	VA800D	VA1200D	VA2000D	VA2500D	VA3000D	VA3600D
PV Input (DC)						
Compatible PV Module Power (Wp)[1]	200–550+	400–750+	400–750+	500–750+	610–750+	610–750+
Max. PV Input Power (W)[2]	2,000 (4 × 500)	3,000 (4 × 750)	3,000 (4 × 750)	3,000 (4 × 750)	3,000 (4 × 750)	3,000 (4 × 750)
MPPTs / Voltage Range / Max. Input (V)	4 / 18–60 / 60					
Max. Input / Short-Circuit Current (A)	20 / 25 per MPPT					
AC Input (Grid Charging)						
Nominal Voltage (Range) / Frequency[5]	230, 240 V (180–275 V) / 50 Hz					
Max. Input Current / Max. Charging Power[4]	13.8 A / 3,000 W					
AC Output (On-Grid)						
Rated Output Power (W)[3]	800	1,200	2,000	2,500	3,000	3,600
Rated / Max. Output Current (A)	3.5 / 3.5	5.2 / 16	8.7 / 16	10.9 / 16	13.0 / 16	15.7 / 16
Nominal Voltage (Range) / Frequency[5]	230, 240 V (180–275 V) / 50 Hz					
Power Factor	> 0.99 (default), adjustable 0.8 leading to 0.8 lagging					
Total Harmonic Distortion	< 3%					
Overvoltage Category	III (AC port)					
AC Output (Backup / EPS)						
Max. Continuous Power[3]	3,600 W					
Rated Output Current (A)	13					
Nominal Voltage (Range) / Frequency (Range)	230 V (218.5–241.5 V) / 50 Hz (49.5–50.5 Hz)					
Switchover Time (Grid to Backup)	≤ 10 ms					
Backup Connection	Dedicated EPS port					
Battery (Built-in)						
Cell Type	$LiFePO_4$ (LFP)					
Nominal Capacity (Wh)	2,508.8					
Cycle Life[6]	12,000 cycles					
Self-Heating	Integrated, automatic					
Max. Expandable Capacity	32.5 kWh per system (VA + 6 × VB5000D); three or more systems in parallel					
Battery Pack VB5000D						
Nominal Capacity / Max. Power	5,017.6 Wh / 2,500 W (0.5C)					
Pack Mixing	Supported					
Dimensions (W × D × H) / Weight	450 × 253 × 323 mm / 41 ± 0.5 kg					
Communication (to VA)	CAN					
Other Parameters	Same as the VA unit					
Protection and Safety						
Aerosol Fire Suppression	Integrated, automatic activation					
Integrated Protection	Insulation monitoring, DC surge protection, residual current monitoring					
Grid and AC Protection	Anti-islanding, AC over-current, AC over-voltage					
Battery Protection (BMS)	Temperature monitoring, over-voltage, over-current					
General Data						
Dimensions (W × D × H) / Weight	450 × 210 × 290 mm / 26 ± 0.5 kg					
Ingress Protection	IP66					
Charging / Discharging Temperature[7]	−20 to 55 °C / −20 to 55 °C					
Operating Ambient Temperature	−20 to 50 °C					
Storage Temperature	−25 to 60 °C					
Relative Humidity / Max. Altitude	5–90% / 2,000 m					
Cooling / Mounting	Natural convection, fanless / Floor-standing, anti-tip accessory					
Communication / Monitoring	Wi-Fi (2.4 GHz), LAN, CAN (battery) / LED indicators, VIP Cloud					
Smart Energy Management	AI scheduling, dynamic tariff support, solar forecast (VIP Cloud)					
Zero Feed-in Control	Via EnergyPilot local EMS controller (optional)					
Warranty[8] / Design Life	10 years / 15 years					

Standards Compliance

Grid	EN 50549-1:2019 · EN 50549-10:2022 · VDE-AR-N 4105 (DE) · CEI 0-21 (IT) · C10/11 (BE) · G98 (UK) · PEA / MEA (TH)
Safety	IEC/EN 62109-1 · IEC/EN 62109-2 · IEC/EN 62477-1 · EN 50665:2017 · EN IEC 62311:2020
Radio and EMC	RED 2014/53/EU · EN 300 328 · EN 301 489-1 / -17 · IEC/EN 61000 series · IEC/EN 62920
Cybersecurity	EN 18031-1 · PSTI (UK)
Battery	IEC/EN 62619 · IEC/EN 63056 · UN 38.3

1 Recommended module power per MPPT input. Check module Voc at the lowest site temperature against the 60 V input limit.
2 PV power feeds both AC output and battery charging. This oversizing does not affect the warranty.
3 Rated power is reached with PV and battery supplying together. Battery-only AC output: 1,200 W with 2.5 kWh, 3,600 W with 7.5 kWh or more installed.
4 Charging from the PV and AC ports can be combined up to the maximum charging power.
5 Nominal voltage, frequency and ranges are set to the local grid code. Grid feed-in power may be limited by local regulations.
6 Measured under laboratory test conditions. Actual cycle life depends on temperature, charge and discharge rate, and depth of discharge.
7 With built-in self-heating. When the cell temperature is low, the battery automatically heats the cells into the operating range, for both charging and discharging. Temperatures refer to cell temperature.
8 Conditions apply. Refer to the VaySunic Limited Warranty for details.

© 2026 VaySunic. All rights reserved. Specifications are subject to change without notice.