SOFTWARE-DEFINED ENERGY

## One Controller, Functions in Software

The energy logic runs as software on the device. Choose and change what EnergyPilot does in the VIP Cloud app.

- Zero export or a set feed-in limit
- Solar and storage dispatch, time-of-use
- EV charging from solar surplus
- Automatic control on site, also without internet[3]
- No internet? Operate it in the app via Bluetooth




**VDG-EM-1**
Single-phase, 1 CT




**VDG-EM-3**
Three-phase or 3 × single-phase, 3 CTs

# EnergyPilot Series

VDG-EM-1 / VDG-EM-3

**Measure Locally, Control Locally**

**1P / 3P**
For single- or three-phase grids

**±1 %**
Metering accuracy, V / I / P / E[1]

UP TO
**100 A**
Clip-on current transformer[2]

**Local EMS**
Edge control on the device

**Zero export**
Or a set feed-in limit

**≤ 1.1 W**
Own power consumption

## Integration and Installation

**Works with Any Inverter**
Third-party PV monitored via CT[4]

**DIN-Rail Mounting**
36 mm wide, fits the distribution board

**Clip-on CT**
No need to cut the main cable

**OLED Display**
Import, export and live values on the device

**Wi-Fi and Bluetooth**
Wi-Fi for the cloud, Bluetooth for local app use

**-20 to 60 °C**
Operating ambient range

1 EnergyPilot measures for control and monitoring. It is not a billing meter.
2 For currents above 100 A, contact VaySunic: a solution with a custom CT is available.
3 Metering and control run automatically on the device. The system is set up once with an internet connection; after that, EnergyPilot controls the other VaySunic devices over the local Wi-Fi network, also without internet. Without internet, the app connects to the device directly via Bluetooth for operation and settings. Remote access via VIP Cloud needs the internet.
4 Inverters of other brands can be monitored at power level with the spare CTs of VDG-EM-3. EnergyPilot does not control third-party inverters.

Values were measured in the VaySunic laboratory under specific test conditions and may vary in actual use. Images are for reference only.

© 2026 VaySunic. All rights reserved. Specifications are subject to change without notice. 

## Typical Applications



01 · ZERO EXPORT

### Zero Export for PV Systems

TYPICAL CONFIGURATION

**VDG-EM + SolarCore microinverters**

- Regulates SolarCore output to keep feed-in at zero or a set limit
- Shows home consumption and grid import / export in the app
- Existing third-party PV can be monitored, not controlled[1]



02 · STORAGE

### Solar and Storage Dispatch

TYPICAL CONFIGURATION

**VDG-EM + PowerCube or SolarHub**

- Stores solar surplus instead of exporting it
- Discharges to cover the home load
- Time-of-use and backup reserve set in VIP Cloud



03 · EV CHARGING

### Solar-Surplus EV Charging

TYPICAL CONFIGURATION

**VDG-EM + ChargeFlow EV charger**

- Charges the car from solar surplus
- Dynamic load balancing protects the main fuse
- Charging modes selected in the app

## One Controller for the Whole System

Set up once online, then coordinated over local Wi-Fi, also without internet

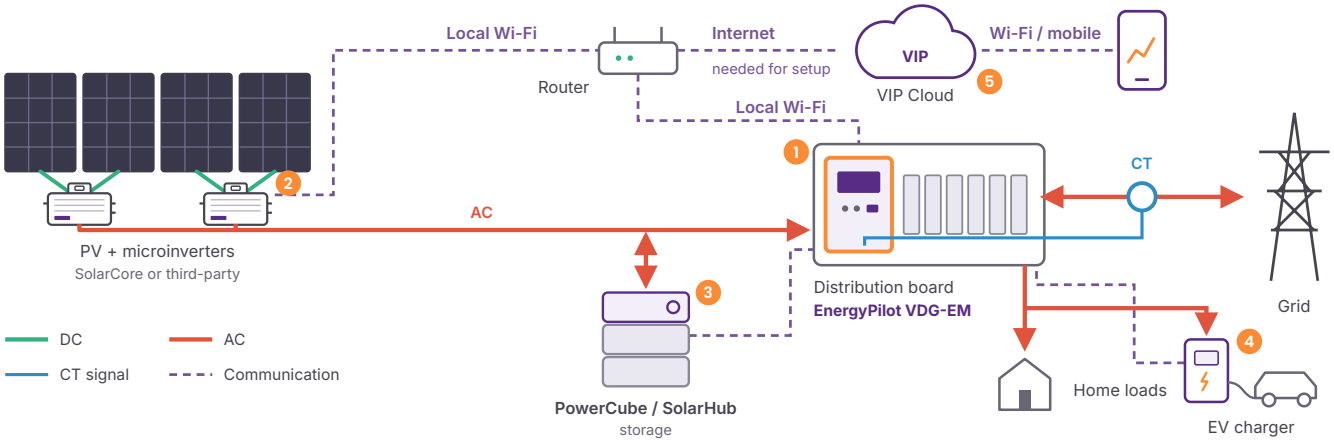


1 LOCAL EMS
**EnergyPilot**
Measures at the grid and controls the other devices over local Wi-Fi

2 SOLAR
**SolarCore**
Controlled directly; other brands monitored[1]

3 STORAGE
**PowerCube**
Or SolarHub, charged from solar surplus

4 CHARGING
**ChargeFlow**
EV charging that follows the sun

5 CLOUD
**VIP Cloud**
App, monitoring and AI scheduling

1 Inverters of other brands can be monitored at power level with the spare CTs of VDG-EM-3. EnergyPilot does not control third-party inverters.

© 2026 VaySunic. All rights reserved. Specifications are subject to change without notice. 

# Installation EnergyPilot Series

EnergyPilot mounts on a DIN rail in the distribution board. Clip the CT around the grid-side conductor, upstream of all loads and generators, and connect the voltage terminals. Installation must be carried out by a qualified electrician.

## Wiring

### VDG-EM-1 Single-phase, 1P2W

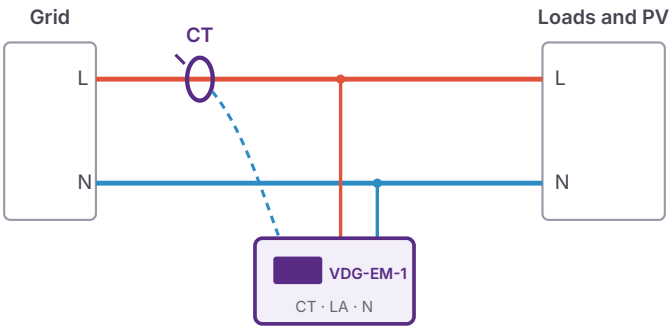


Voltage from L and N to terminals LA and N. One CT on L, between the grid and the first branch.

### VDG-EM-3 Three-phase, 3P4W

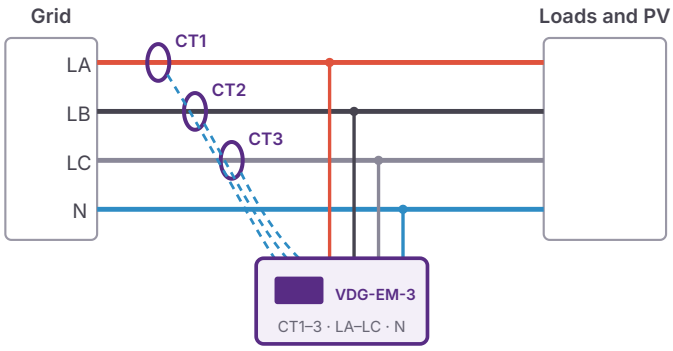


One CT per phase. With a single-phase inverter on a three-phase supply, connect the inverter phase to LA and N.

### VDG-EM-3 3 × single-phase, for retrofits

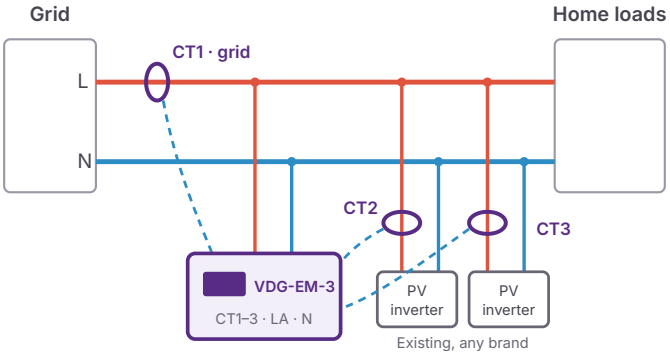


#### Retrofit Mode

- VDG-EM-3 can also measure three single-phase circuits instead of one three-phase supply. The mode is set in the VIP Cloud app.
- CT1 measures the grid connection, so home consumption and grid import / export are visible.
- CT2 and CT3 measure existing PV inverters of any brand, at power level. They are monitored, not controlled.

## Dimensions and Interfaces

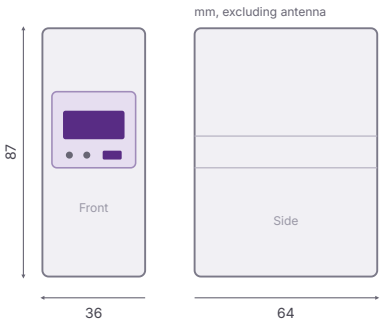


| Interface | Function |
|---|---|
| Grid terminal | N · LA · LB · LC, voltage measurement and power supply |
| CT terminal | CT– · CT1 · CT2 · CT3 |
| Antenna | External Wi-Fi antenna; high-gain antenna optional for metal enclosures |
| OLED display | Live values, grid import and export energy |
| Button and LEDs | Parameter button, power and communication status LEDs. Wi-Fi signal quality is shown in the app. |

## Commissioning in Four Steps




**1 Mount**
Snap onto the 35 mm DIN rail in the distribution board.

**2 Connect**
Wire the grid terminal: L and N, or LA, LB, LC and N.

**3 Clip the CT**
On the grid-side conductor, oriented as shown in the guide.

**4 Pair**
Add the device in the VIP Cloud Installer app. Needs the internet.

Refer to the VDG-EM Series installation guide for CT orientation, terminal torque and commissioning in the VIP Cloud Installer app.

© 2026 VaySunic. All rights reserved. Specifications are subject to change without notice. 

# Technical Specifications EnergyPilot Series

VaySunic
Small Things Matter.

| Model | VDG-EM-1 | VDG-EM-3 |
|---|---|---|
| **Power Supply** | | |
| Grid Type | Single-phase, 1P2W | 3P4W, or 3 × single-phase[1] |
| Rated Voltage | 220 / 230 V | 3 × 230 / 400 V |
| Operating Voltage Range | 0.8–1.2 Un | |
| Frequency | 50 / 60 Hz | |
| Power Consumption | ≤ 1.1 W | |
| **Measurement** | | |
| Phase Voltage Range | 176–264 V AC | |
| Current Range / Basic (Max.) Current | 0.02–100 A / 5 (100) A | |
| Measured Values | Voltage, current, power, frequency, import and export energy | |
| Accuracy: Voltage / Current, Power, Energy[2] | ±1% / ±1% | |
| Current Transformer[3] | 1 × clip-on, 100 A / 33.3 mA | 3 × clip-on, 100 A / 33.3 mA |
| CT Cable Length | 2 m | |
| Accessories | CTs included; high-gain signal booster antenna (optional) | |
| **Communication and Control** | | |
| Wi-Fi | 802.11 b/g/n, 2.4 GHz, external antenna | |
| Bluetooth | Direct local connection to the app, also without internet | |
| Local EMS Functions[4] | Zero export / feed-in limit, storage dispatch, EV surplus charging | |
| Controlled VaySunic Devices | SolarCore, SolarHub, PowerCube, ChargeFlow, over local Wi-Fi (internet for initial setup only) | |
| Third-party Inverters[5] | Any brand, grid-point metering | Any brand, output monitored via CT2 / CT3 |
| Monitoring | OLED display, LED indicators, VIP Cloud (incl. Wi-Fi signal quality) | |
| **General Data** | | |
| Dimensions (W × D × H) / Weight | 36 × 64 × 87 mm (excluding antenna) / 108.5 g | |
| Mounting | 35 mm DIN rail, indoor distribution board | |
| Operating / Storage Temperature | −20 to 60 °C / −40 to 85 °C | |
| Relative Humidity | 5–85%, non-condensing | |
| Max. Operating Altitude | 3,000 m | |

## Standards Compliance

| | |
|---|---|
| **Directives** | Low Voltage Directive 2014/35/EU · EMC Directive 2014/30/EU |
| **Safety** | EN IEC 62368-1 |
| **EMC** | EN 55032 · EN 55035 · EN IEC 61000-3-2 · EN 61000-3-3 |
| **Grid** | Zero-export controller on the PEA / MEA approved lists (TH, VDG-EM-3) |

1 VDG-EM-3 can also measure three single-phase circuits, for example to retrofit an existing PV system; the mode is set in the VIP Cloud app. With a single-phase inverter on a three-phase supply, connect the inverter phase to LA and N.
2 EnergyPilot measures for control and monitoring. It is not a billing meter.
3 For currents above 100 A, contact VaySunic: a solution with a custom CT is available.
4 Feed-in is regulated continuously. Short fluctuations around the set value can occur when the load or PV output changes.
5 Inverters of other brands can be monitored at power level with the spare CTs of VDG-EM-3. EnergyPilot does not control third-party inverters.

© 2026 VaySunic. All rights reserved. Specifications are subject to change without notice. 